# Product Reference Manual

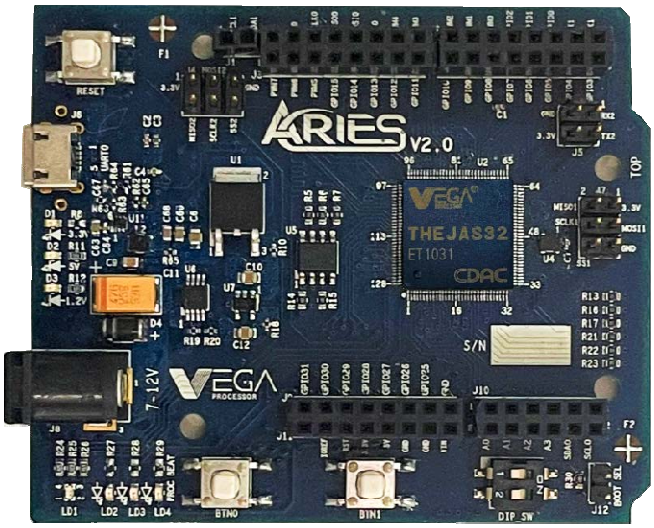


## Description

The ARIES v2.0 is a fully indigenous and a “Made in India” product to get started with basic microprocessor programming and embedded systems. This board is built upon a RISC-V ISA compliant VEGA Processor with easy-to-use hardware and software. The VEGA SDK also provides full ecosystem with numerous examples and support documentation. This board is designed and developed by Centre for Development of Advanced Computing (C-DAC) as part of the Digital India RISC-V (DIR-V) Program, by the Ministry of Electronics and Information Technology, Government of India.

## Target areas/Applications

Low power IoT, Sensor fusion, Smart Meter, System supervisors, Remote sensors, Wearable devices, Toy and electronic education equipment, Legacy 8/16-bit applications, Industrial networking and manymore…

## Features

| | |
|---|---|
| Controller | THEJAS32 |
| SRAM | 256KB |
| Flash | 2MB |
| Input voltage | 7-12V |
| PWM pins | 8nos |
| Analog Input pins | 4nos |
| SPI | 3nos |
| UART | 2nos |
| I2C | 2nos |
| GPIO | 20nos |
| RGB | 1nos (3x GPIO) |
| PUSH BUTTON | 2nos (2 x GPIO) |
| DC Current per I/O pin | 12mA |
| IO Voltage | 3.3V |
| Clock speed | 100MHz |
| Length | 78mm |
| Width | 66mm |

# CONTENTS


**1. The Board** **4**

**2. Handling the Board** **4**

2.1. Recommended Operating Conditions 4

2.2. Power Consumption 4

**3. Functional Overview** **5**

3.1. Board Topology 5

3.2. Processor 5

3.3. THEJAS32 pinout 6

3.4. Power Tree 10

**4. Board Operation** **11**

4.1. Getting Started 11

**5. Connector Pinouts** **11**

5.1. Board Outline & Mounting Holes 14

**6. Company Information** **14**

7. **Reference Documentation** 15

# 1. The Board

ARIES v2.0 is a development platform based on THEAJS32 ASIC which operates at a frequency of 100MHz. THEJAS32 SoC includes VEGA ET1031 Microprocessor, 256KB internal SRAM, Three UARTs, Four SPIs, Three TIMERs, Eight PWMs, Three I2C interfaces, 32 GPIOs etc. This board contains everything needed to support standalone operation. To get started simply connect the board to a computer with a Micro-B USB Cable or power it with a AC/DC adapter or a battery.

# 2. Handling the Board

To avoid causing any damage or malfunctions; it is important to be mindful of the following points when handling or operating the board:

- To prevent any damage make sure to handle the board while taking electrostatic discharge (ESD) precautions.
- Power down the board by disconnecting the board from USB port.

## 2.1. Recommended Operating Conditions

| Symbol | Description | Min | Max |
|---|---|---|---|
| | Conservative thermal limits for the whole board: | -0 °C (100°F) | 85 °C ( 185°F) |

## 2.2. Power Consumption

| Symbol | Description | Min | Typ | Max | Unit |
|---|---|---|---|---|---|
| VINMax | Maximum input voltage from VIN pad | 7 | - | 12 | V |
| VUSBMax | Maximum input voltage from USB connector | - | 5.5 | V | |
| PMax | DC Current per I/O Pin | - | - | 12 | mA |

# 3. Functional Overview

## 3.1. Board Topology

Top view

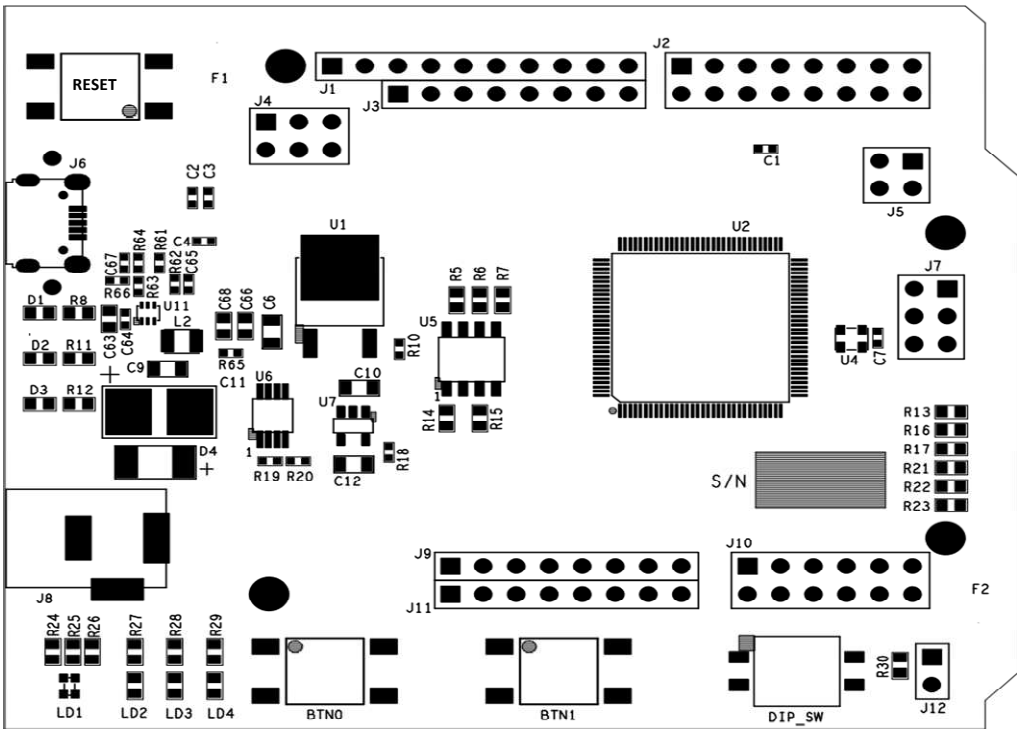


| Ref. | Description | Ref. | Description |
|---|---|---|---|
| J8 | Power jack | U2 | THEJAS32 SoC |
| J6 | USB B Connector | U1 | 3.3V Regulator |
| J12 | Boot Select Header | U4 | 100 MHz Oscillator |
| RESET | Reset Button | U5 | SPI Boot Flash Memory |
| BTN0 | Push Button 0 for GPIO | U6 | Op-amp |
| BTN1 | Push Button 1 for GPIO | U7 | 1.2V Regulator |
| DIP_SW | DIP Switch for GPIO | LD1 | RGB LED |

## 3.2. Processor

The main controller is THEAJS32 SoC which operates at a frequency of 100MHz. It includes VEGA ET1031 Microprocessor, 256KB internal SRAM, Three UARTs, Four SPIs, Three

TIMERs, Eight PWMs, Three I2C interface, 32 GPIOs. Most of its pins are connected to the external headers, however some are reserved for internal communication.

### 3.3. THEJAS32 pinout

| Pin # | **Pin Name** | **Pin Description** | **Type** |
|---|---|---|---|
| 1 | GPIO19 | General purpose IO GPIO1 (3). | I/O |
| 2 | GPIO18 | General purpose IO GPIO1 (2). | I/O |
| 3 | VSSIO | Ground reference for IO pins. | S |
| 4 | VDDIO | Positive supply for IO pins. Connect to 3.3V supply. | S |
| 5 | GPIO17 | General purpose IO GPIO1 (1). | I/O |
| 6 | GPIO16 | General purpose IO GPIO1 (0). | I/O |
| 7 | SPI_MOSI3 | SPI 3 Master Out Slave In. | O |
| 8 | VDD | Positive supply for logic. Connect to 1.2V supply. | S |
| 9 | VSS | Ground reference for logic. | S |
| 10 | SPI_MISO3 | SPI 3 Master In Slave Out. | I |
| 11 | SPI_SCLK3 | SPI 3 Clock. | O |
| 12 | SPI_SS3 | SPI 3 Chip Select. | O |
| 13 | VSSIO | Ground reference for IO pins. | S |
| 14 | VDDIO | Positive supply for IO pins. Connect to 3.3V supply. | S |
| 15 | BOOT_SEL | Boot select. | I |
| 16 | PROC_HB | Heartbeat signal. | O |
| 17 | RFIU1 | Connect to GND. | NA |
| 18 | VDD | Positive supply for logic. Connect to 1.2V supply. | S |
| 19 | VSS | Ground reference for logic. | S |
| 20 | RFIU2 | Connect to GND through a 1K resistor. | NA |
| 21 | RFIU3 | JTAG TDO. Left unconnected. | NA |
| 22 | RFIU4 | JTAG TMS. Connect to GND through a 1K resistor. | NA |
| 23 | RFIU5 | JTAG TDI. Connect to GND through a 1K resistor. | NA |
| 24 | VSSIO | Ground reference for IO pins. | S |
| 25 | VDDIO | Positive supply for IO pins. Connect to 3.3V supply. | S |
| 26 | VDD | Positive supply for logic. Connect to 1.2V supply. | S |

| | | | |
|---|---|---|---|
| 27 | VSS | Ground reference for logic. | S |
| 28 | RFIU6 | JTAG TCK. Connect to GND through a 1K resistor | NA |
| 29 | RFIU7 | JTAG TRST. Connect to GND through a 1K resistor | NA |
| 30 | RFIU8 | Test mode select. Connect to GND through a 1K resistor. | NA |
| 31 | I2C_SDA2 | I2C 2 Serial Data. | I/O |
| 32 | I2C_SCL2 | I2C 2 Serial Clock. | I/O |
| 33 | I2C_SCL0 | I2C 0 Serial Clock. | I/O |
| 34 | I2C_SDA0 | I2C 0 Serial Data. | I/O |
| 35 | VSS | Ground reference for logic. | S |
| 36 | VDD | Positive supply for logic. Connect to 1.2V supply. | S |
| 37 | VDDIO | Positive supply for IO pins. Connect to 3.3V supply. | S |
| 38 | VSSIO | Ground reference for IO pins. | S |
| 39 | SPI_SS1 | SPI 1 Chip Select. | O |
| 40 | SPI_SCLK1 | SPI 1 Clock. | O |
| 41 | SPI_MISO1 | SPI 1 Master In Slave Out. | I |
| 42 | SPI_MOSI1 | SPI 1 Master Out Slave In. | O |
| 43 | PUSH_RESETN | Reset. (ACTIVE LOW) | I |
| 44 | CLK | System Clock. | I |
| 45 | UART_TX1 | UART 1 Serial Out / Transmit. | O |
| 46 | VDDIO | Positive supply for IO pins. Connect to 3.3V supply. | S |
| 47 | VSSIO | Ground reference for IO pins. | S |
| 48 | VSS | Ground reference for logic. | S |
| 49 | VDD | Positive supply for logic. Connect to 1.2V supply. | S |
| 50 | UART_RX1 | UART 1 Serial In / Receive. | I |
| 51 | GPIO15 | General purpose IO GPIO0 (15). | I/O |
| 52 | GPIO14 | General purpose IO GPIO0 (14). | I/O |
| 53 | GPIO13 | General purpose IO GPIO0 (13). | I/O |
| 54 | GPIO12 | General purpose IO GPIO0 (12). | I/O |
| 55 | GPIO11 | General purpose IO GPIO0 (11). | I/O |
| 56 | VSS | Ground reference for logic. | S |

| | | | |
|---|---|---|---|
| 57 | VDD | Positive supply for logic. Connect to 1.2V supply. | S |
| 58 | GPIO10 | General purpose IO GPIO0 (10). | I/O |
| 59 | VDDIO | Positive supply for IO pins. Connect to 3.3V supply. | S |
| 60 | VSSIO | Ground reference for IO pins. | S |
| 61 | GPIO9 | General purpose IO GPIO0 (9). | I/O |
| 62 | GPIO8 | General purpose IO GPIO0 (8). | I/O |
| 63 | GPIO7 | General purpose IO GPIO0 (7). | I/O |
| 64 | GPIO6 | General purpose IO GPIO0 (6). | I/O |
| 65 | GPIO5 | General purpose IO GPIO0 (5). | I/O |
| 66 | GPIO4 | General purpose IO GPIO0 (4). | I/O |
| 67 | VSS | Ground reference for logic. | S |
| 68 | VDD | Positive supply for logic. Connect to 1.2V supply. | S |
| 69 | VDDIO | Positive supply for IO pins. Connect to 3.3V supply. | S |
| 70 | VSSIO | Ground reference for IO pins. | S |
| 71 | GPIO3 | General purpose IO GPIO0 (3). | I/O |
| 72 | GPIO2 | General purpose IO GPIO0 (2). | I/O |
| 73 | GPIO1 | General purpose IO GPIO0 (1). | I/O |
| 74 | GPIO0 | General purpose IO GPIO0 (0). | I/O |
| 75 | PWM_7 | Pulse Width Modulation. | O |
| 76 | PWM_6 | Pulse Width Modulation. | O |
| 77 | PWM_5 | Pulse Width Modulation. | O |
| 78 | VSS | Ground reference for logic. | S |
| 79 | VDD | Positive supply for logic. Connect to 1.2V supply. | S |
| 80 | PWM_4 | Pulse Width Modulation. | O |
| 81 | PWM_3 | Pulse Width Modulation. | O |
| 82 | PWM_2 | Pulse Width Modulation. | O |
| 83 | VDDIO | Positive supply for IO pins. Connect to 3.3V supply. | S |
| 84 | VSSIO | Ground reference for IO pins. | S |
| 85 | PWM_1 | Pulse Width Modulation. | O |
| 86 | PWM_0 | Pulse Width Modulation. | O |
| 87 | SPI_MOSI0 | SPI 0 Master Out Slave In. | O |

| | | | |
|---|---|---|---|
| 88 | VSS | Ground reference for logic. | S |
| 89 | VDD | Positive supply for logic. Connect to 1.2V supply. | S |
| 90 | SPI_MISO0 | SPI 0 Master In Slave Out. | I |
| 91 | SPI_SCLK0 | SPI 0 Clock. | O |
| 92 | SPI_SS0 | SPI 0 Chip Select. | O |
| 93 | VDDIO | Positive supply for IO pins. Connect to 3.3V supply. | S |
| 94 | VSSIO | Ground reference for IO pins. | S |
| 95 | I2C_SDA1 | I2C 1 Serial Data. | I/O |
| 96 | I2C_SCL1 | I2C 1 Serial Clock. | I/O |
| 97 | SPI_MOSI2 | SPI 2 Master Out Slave In. | O |
| 98 | SPI _MISO2 | SPI 2 Master In Slave Out. | I |
| 99 | VDD | Positive supply for logic. Connect to 1.2V supply. | S |
| 100 | VSS | Ground reference for logic. | S |
| 101 | SPI_SCLK2 | SPI 2 Clock. | O |
| 102 | SPI_SS2 | SPI 2 Chip Select. | O |
| 103 | VSSIO | Ground reference for IO pins. | S |
| 104 | VDDIO | Positive supply for IO pins. Connect to 3.3V supply. | S |
| 105 | UART_RX2 | UART 2 Serial In / Receive. | I |
| 106 | UART_TX2 | UART 2 Serial Out / Transmit. | O |
| 107 | UART_RX0 | UART 0 Serial In / Receive. | I |
| 108 | UART_TX0 | UART 0 Serial Out / Transmit. | O |
| 109 | GPIO31 | General purpose IO GPIO1 (15). | I/O |
| 110 | GPIO30 | General purpose IO GPIO1 (14). | I/O |
| 111 | GPIO29 | General purpose IO GPIO1 (13). | I/O |
| 112 | VDD | Positive supply for logic. Connect to 1.2V supply. | S |
| 113 | VSS | Ground reference for logic. | S |
| 114 | VSSIO | Ground reference for IO pins. | S |
| 115 | VDDIO | Positive supply for IO pins. Connect to 3.3V supply. | S |
| 116 | GPIO28 | General purpose IO GPIO1 (12). | I/O |
| 117 | GPIO27 | General purpose IO GPIO1 (11). | I/O |
| 118 | GPIO26 | General purpose IO GPIO1 (10). | I/O |

| | | | |
|---|---|---|---|
| 119 | GPIO25 | General purpose IO GPIO1 (9). | I/O |
| 120 | GPIO24 | General purpose IO GPIO1 (8). | I/O |
| 121 | GPIO23 | General purpose IO GPIO1 (7). | I/O |
| 122 | GPIO22 | General purpose IO GPIO1 (6). | I/O |
| 123 | VSSIO | Ground reference for IO pins. | S |
| 124 | VDDIO | Positive supply for IO pins. Connect to 3.3V supply. | S |
| 125 | VDD | Positive supply for logic. Connect to 1.2V supply. | S |
| 126 | VSS | Ground reference for logic. | S |
| 127 | GPIO21 | General purpose IO GPIO1 (5). | I/O |
| 128 | GPIO20 | General purpose IO GPIO1 (4). | I/O |

# S-Supply, I/O - Input/ Output, I - Input, O - Output, RFIU - Reserved for internal use

## 3.4. Power Tree

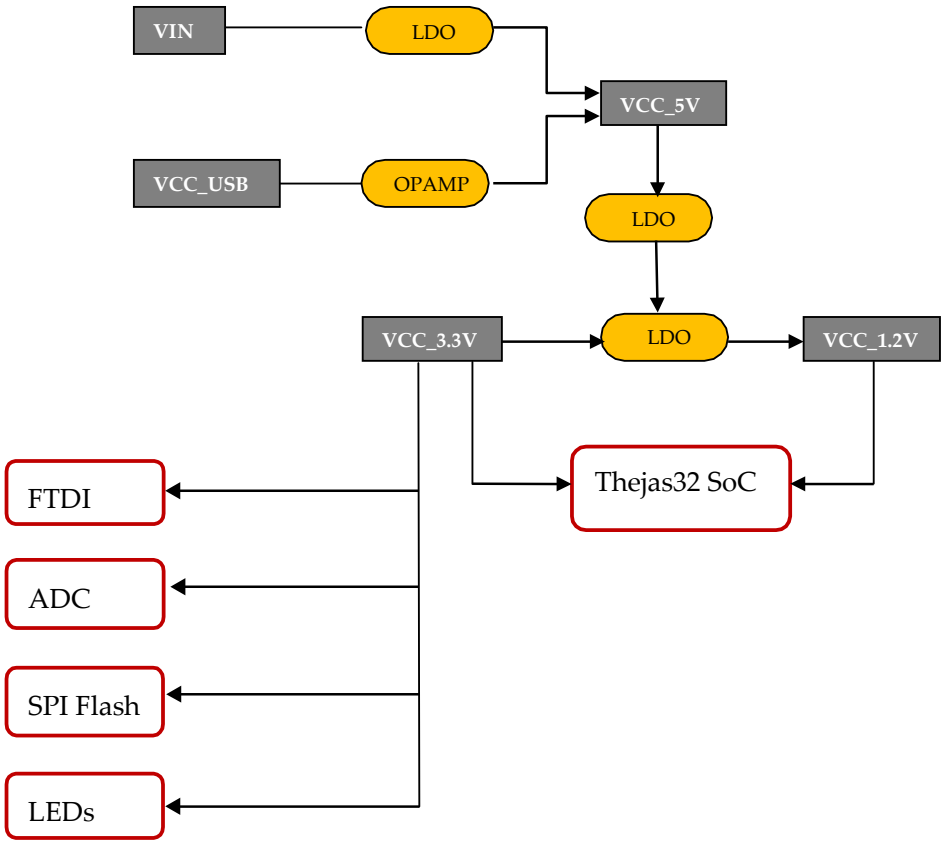

# 4. Board Operation

## 4.1. Getting Started

- To use Vega Arduino IDE for programming follow the steps given in the link below
  - For Linux; https://bit.ly/vega-linux
  - For Windows; https://bit.ly/vega-windows
- To use Eclipse IDE for programming follow the steps given in the link below
  - https://cdac-vega.gitlab.io/sdkuserguide.html

# 5. Connector pinouts

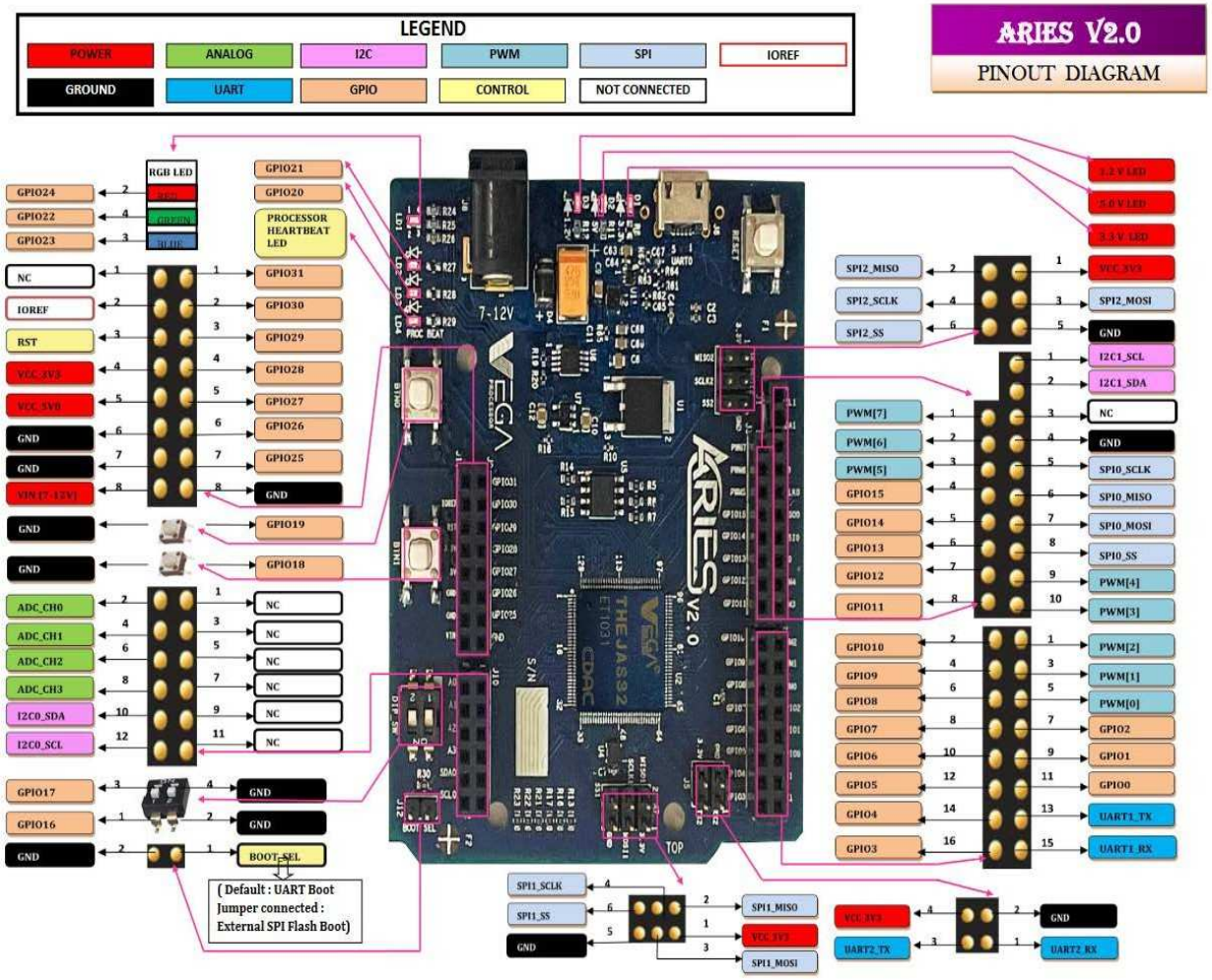

| SL No. | SPECIFICATIONS | THEJAS 32 | ARIES BOARD | REMARKS |
|---|---|---|---|---|
| 1 | SPI (4) | SPI_SS0 | J1_8 | Connected to HEADER J1 |
| 2 | | SPI_SCLK0 | J1_5 | |
| 3 | | SPI_MISO0 | J1_6 | |
| 4 | | SPI_MOSI0 | J1_7 | |
| 5 | | SPI_SS1 | J7_6 | Connected to HEADER J7 |
| 6 | | SPI_SCLK1 | J7_4 | |
| 7 | | SPI_MISO1 | J7_2 | |
| 8 | | SPI_MOSI1 | J7_3 | |
| 9 | | SPI_SS2 | J4_6 | Connected to HEADER J4 |
| 10 | | SPI_SCLK2 | J4_4 | |
| 11 | | SPI_MISO2 | J4_2 | |
| 12 | | SPI_MOSI2 | J4_3 | |
| 13 | | SPI_SS3 | U5_1 | Connected to SPI BOOT FLASH IC |
| 14 | | SPI_SCLK3 | U5_6 | |
| 15 | | SPI_MISO3 | U5_2 | |
| 16 | | SPI_MOSI3 | U5_5 | |
| | | | | |
| 17 | I2C (3) | SCL | J10_12 | Connected to HEADER J10 |
| 18 | | SDA | J10_10 | |
| 19 | | SCL_1 | J1_1 | Connected to HEADER J1 |
| 20 | | SDA_1 | J1_2 | |
| 21 | | SCL_2 | U9_10 | Connected to I2C ADC IC |
| 22 | | SDA_2 | U9_9 | |
| | | | | |
| 23 | UART (3) | UART_RXD0 | U10_15 | Connected to UART TO USB INTERFACE IC |
| 24 | | UART_TXD0 | U10_2 | |
| 25 | | UART_RX1 | J2_15 | Connected to HEADER J2 |

| | | | | |
|---|---|---|---|---|
| 26 | | UART_TX1 | J2_13 | |
| 27 | | UART_RX2 | J5_1 | Connected to HEADER J5 |
| 28 | | UART_TX2 | J5_2 | |
| | | | | |
| 29 | PWM (8) | PWM_0 | J2_5 | Connected to HEADER J2 |
| 30 | | PWM_1 | J2_3 | |
| 31 | | PWM_2 | J2_1 | |
| 32 | | PWM_3 | J1_10 | Connected to HEADER J1 |
| 33 | | PWM_4 | J1_9 | |
| 34 | | PWM_5 | J3_3 | Connected to HEADER J3 |
| 35 | | PWM_6 | J3_2 | |
| 36 | | PWM_7 | J3_1 | |
| | | | | |
| 37 | GPIO (32) | GPIO0 | J2_11 | Connected to HEADER J2 |
| 38 | | GPIO1 | J2_9 | |
| 39 | | GPIO2 | J2_7 | |
| 40 | | GPIO3 | J2_16 | |
| 41 | | GPIO4 | J2_14 | |
| 42 | | GPIO5 | J2_12 | |
| 43 | | GPIO6 | J2_10 | |
| 44 | | GPIO7 | J2_8 | |
| 45 | | GPIO8 | J2_6 | |
| 46 | | GPIO9 | J2_4 | |
| 47 | | GPIO10 | J2_2 | |
| 48 | | GPIO11 | J3_8 | Connected to HEADER J3 |
| 49 | | GPIO12 | J3_7 | |
| 50 | | GPIO13 | J3_6 | |
| 51 | | GPIO14 | J3_5 | |
| 52 | | GPIO15 | J3_4 | |
| 53 | | GPIO16 | DIP_SW_1 | Connected to DIP SWITCH |
| 54 | | GPIO17 | DIP_SW_3 | |

| | | | | |
|---|---|---|---|---|
| 55 | | GPIO18 | BTN1_1 | Connected to PUSH BUTTON |
| 56 | | GPIO19 | BTN0_1 | |
| 57 | | GPIO20 | LD3_1 | Connected to LED |
| 58 | | GPIO21 | LD2_1 | |
| 59 | | GPIO22 | LD1_4 | Connected to GREEN of RGBLED |
| 60 | | GPIO23 | LD1_3 | Connected to BLUE of RGB LED |
| 61 | | GPIO24 | LD1_2 | Connected to RED of RGB LED |
| 62 | | GPIO25 | J9_7 | Connected to HEADER J9 |
| 63 | | GPIO26 | J9_6 | |
| 64 | | GPIO27 | J9_5 | |
| 65 | | GPIO28 | J9_4 | |
| 66 | | GPIO29 | J9_3 | |
| 67 | | GPIO30 | J9_2 | |
| 68 | | GPIO31 | J9_1 | |
| | | | | |
| 69 | CLOCK | CLK_100M | U4_3 | Connected to OSCILLATOR |
| 70 | RESET | PUSH_RESET N | U 8_1 | Connected to RESET IC |
| 71 | HEART BEAT LED | PROC_HEAR T_BEAT | LD4_1 | Connected to LED |
| 72 | BOOT SELECT | BOOT_SEL | J12_1 | Connected to HEADER J12 |
| | | | | |
| 73 | ADC_CH0 | _ | J10_2,U9_4 | ANALOG INPUTS |
| 74 | ADC_CH1 | _ | J10_4,U9_5 | |

| | | | | |
|---|---|---|---|---|
| 75 | ADC_CH2 | – | J10_6,U9_6 | Connected toHEADER J10 & I2C ADC IC |
| 76 | ADC_CH3 | – | J10_8,U9_7 | |

## 6. Board Outline & Mounting Holes

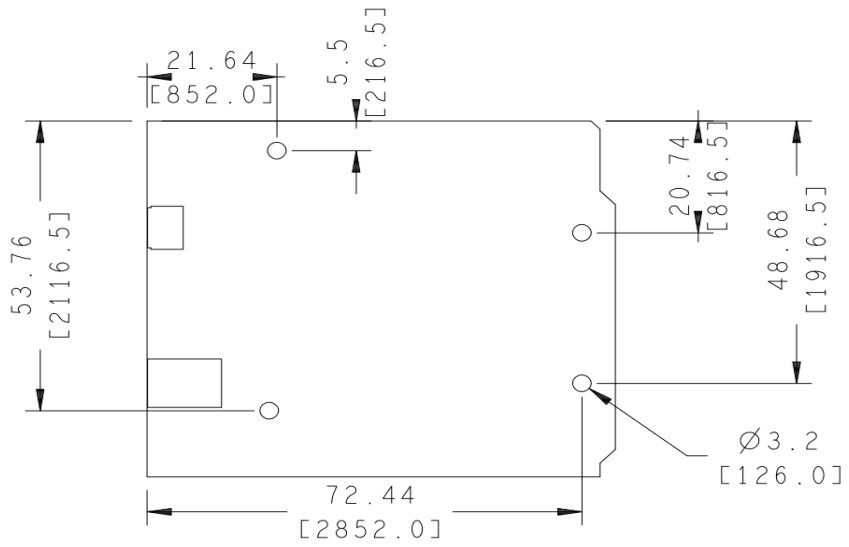


(Dimensions in mm [mil])

## 7. Company Information

| **Company name** | **C-DAC** |
|---|---|
| Company Address | Hardware Design Group<br>Centre for Development of Advanced Computing (C-DAC)Thiruvananthapuram, Kerala – 695033<br>Fax: 0471-2723456 Email: vega@cdac.in<br>www.vegaprocessors.in<br>www.cdac.in |

## 8. Reference Documentation

| | **Link** |
|---|---|
| ARIESv2.0 details | www.vegaprocessors.in/devboards/ariesv2 |